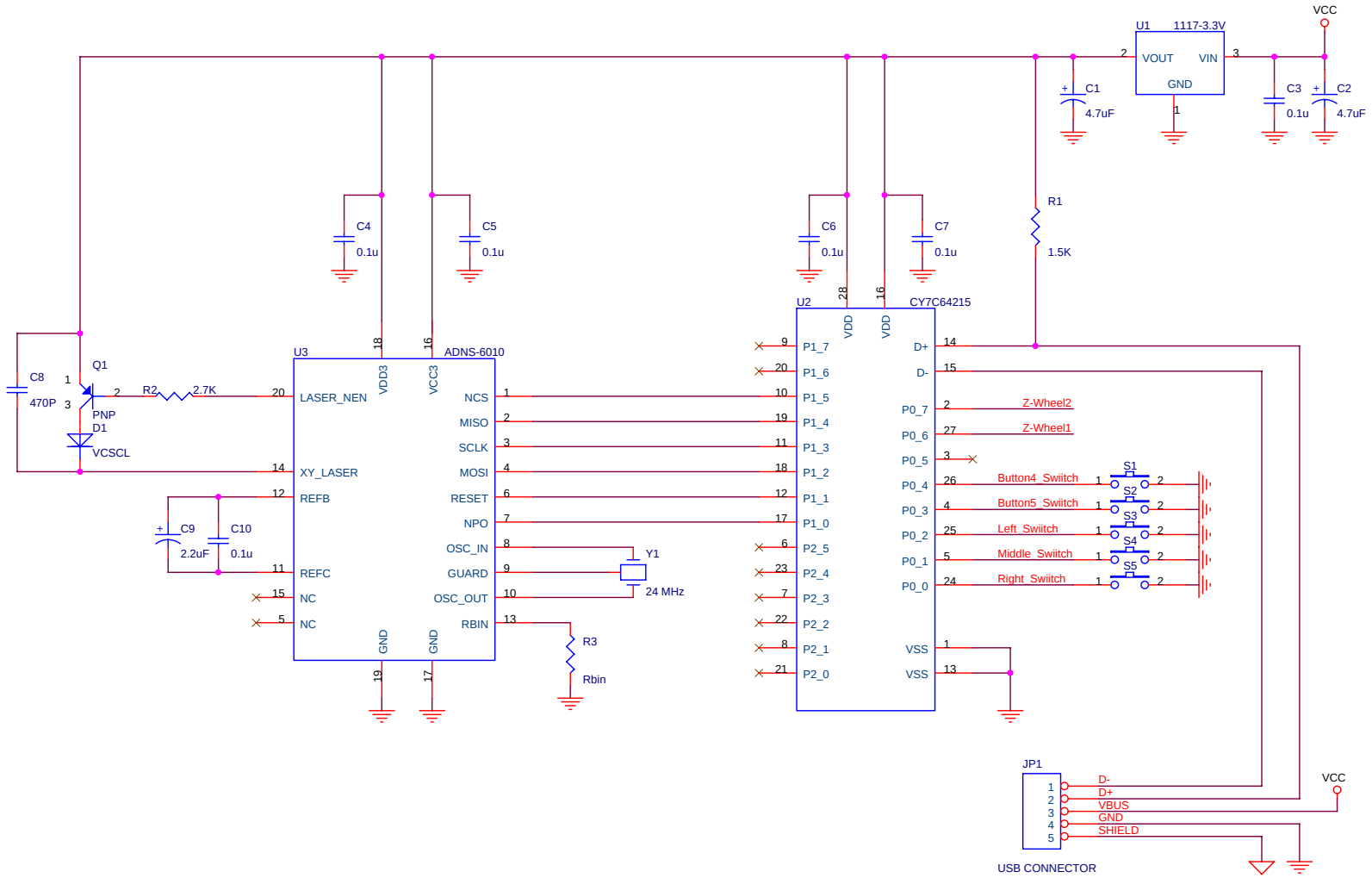

CYPRESS SEMICONDUCTOR		
Title	Cypress enCoReIII full speed Laser Mouse reference design	
Size B	Document Number	Rev A
Date: Monday, August 28, 2006	Sheet 1 of 1	